Useful Everyday
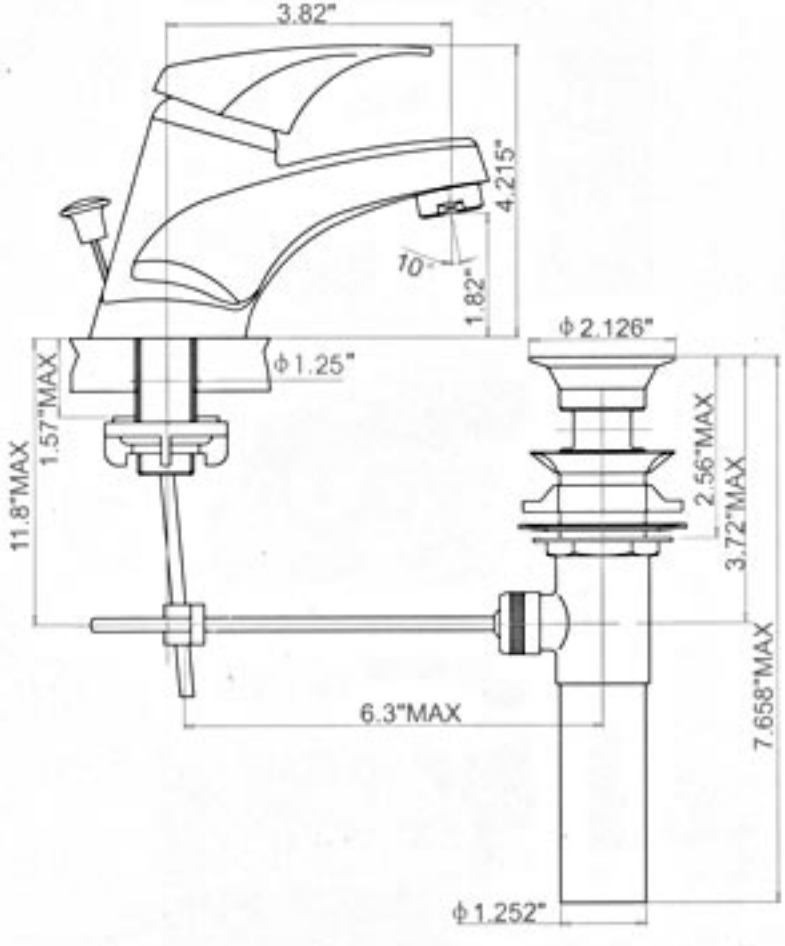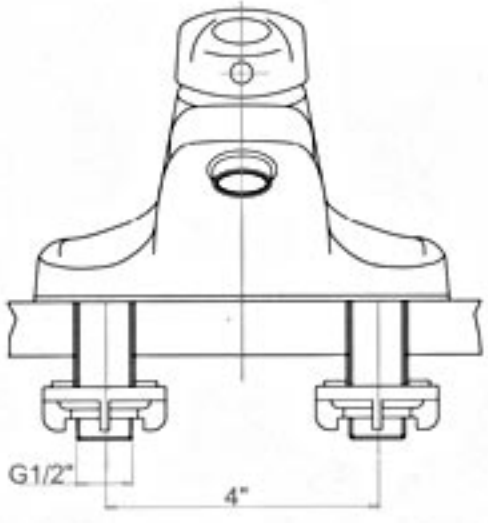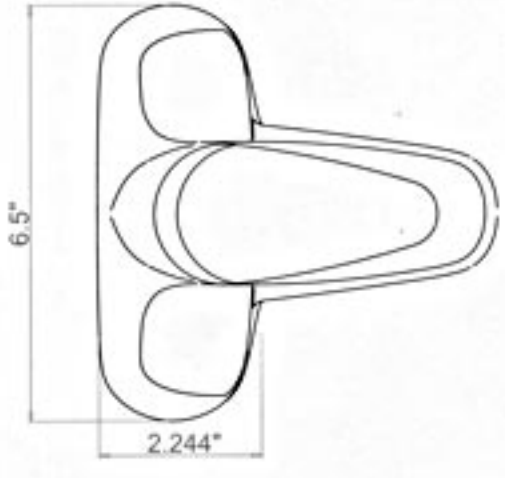
MODEL#	FINISH	HANDLES	BASE SIZE	HOLES	CARTRIDGE
3105C	CHROME	SINGLE	4"	3	CERAMIC DISC