Useful Everyday
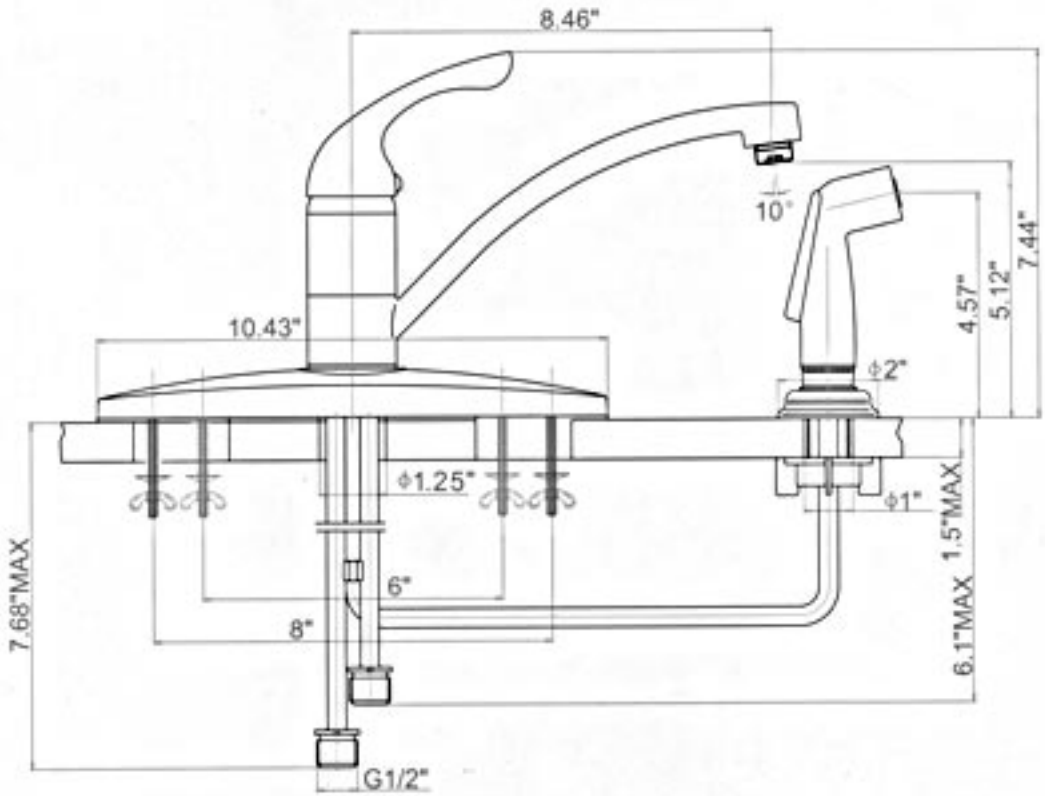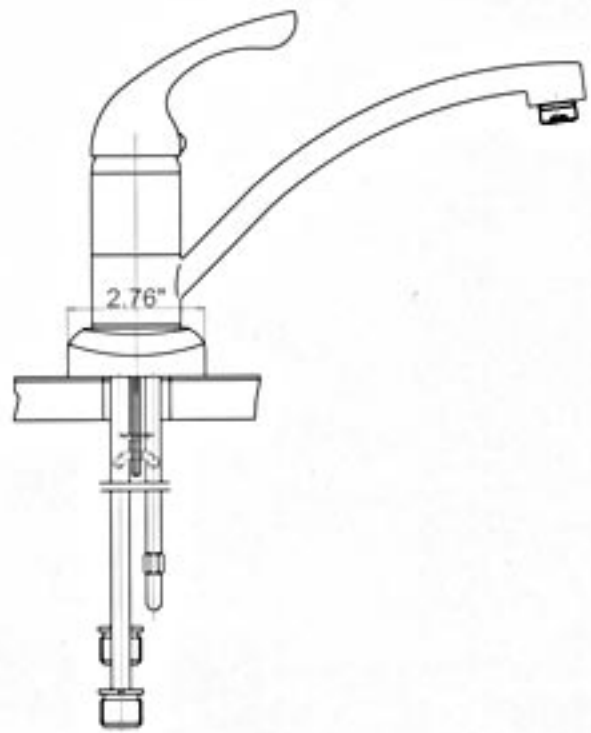
MODEL#	FINISH	HANDLES	BASE SIZE	HOLES	CARTRIDGE
5104C-WS	CHROME	SINGLE	6" or 8"	4	CERAMIC DISC